Belmaflex Polska Sp. z o.o.
Handlowa 12 st
PL-41-807 Zabrze
Tel.: +48 32 37 68 240
email: bfpl@belmaflex.com
website: www.belmaflex.com

Product request form

Valve casings

1. Product parameters

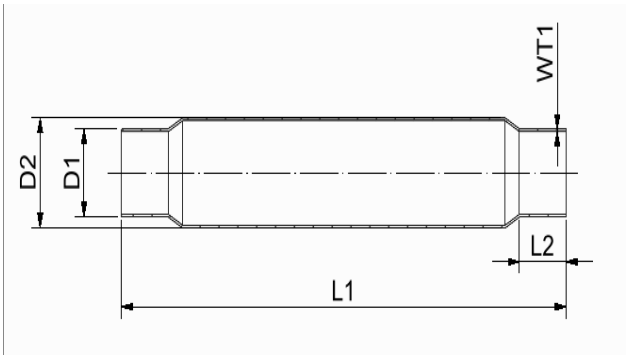

Please indicate the requested product parameters

product dimension D1 [mm]	product dimension D2 [mm]	L1 [mm]	L2 [mm]	quantity