Belmaflex Polska Sp. z o.o.
Handlowa 12 st
PL-41-807 Zabrze
Tel.: +48 32 37 68 240
email: **bfpl@belmaflex.com**
website: **www.belmaflex.com**

Request form

T-fitting, shrinkable

1. Product parameters

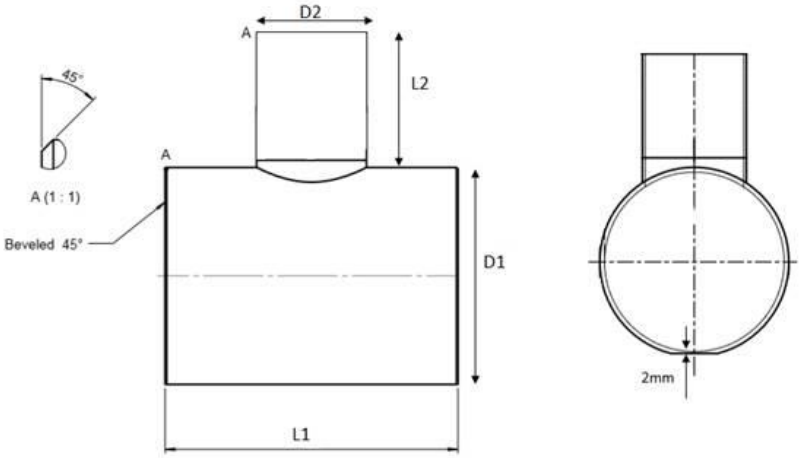

D1 dimension [mm]	D2 dimension [mm]	L1 [mm]	L2 [mm]	wall thickness D1	wall thickness D2	foil packing
				standard / extra	standard / extra	yes/no
				standard / extra	standard / extra	yes/no
				standard / extra	standard / extra	yes/no
				standard / extra	standard / extra	yes/no
				standard / extra	standard / extra	yes/no
				standard / extra	standard / extra	yes/no
				standard / extra	standard / extra	yes/no
				standard / extra	standard / extra	yes/no
				standard / extra	standard / extra	yes/no
				standard / extra	standard / extra	yes/no
				standard / extra	standard / extra	yes/no
				standard / extra	standard / extra	yes/no
				standard / extra	standard / extra	yes/no
				standard / extra	standard / extra	yes/no
				standard / extra	standard / extra	yes/no
				standard / extra	standard / extra	yes/no